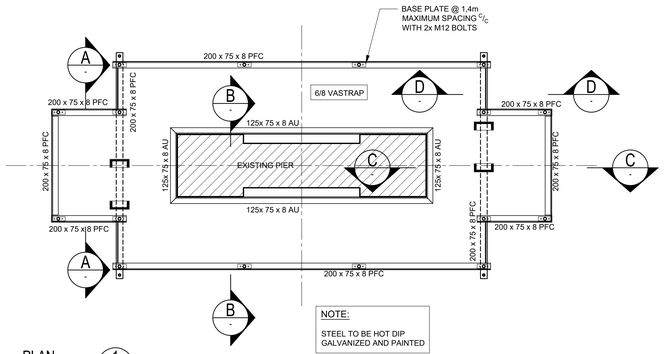

NOTE:

STEEL TO BE HOT DIP GALVANIZED AND PAINTED

PLAN 1
SCALE 1:25

CORROSION PROTECTION OF STRUCTURAL STEELWORK

1. PRODUCT

A THREE COAT SYSTEM COMPRISING:
- PLASCON ALKYD ZINC PHOSPHATE PRIMER (UC 182)
- PLASCON SUPER UNIVERSAL ENAMEL (NY 1/G-RANGE)

PRODUCT TO BE APPLIED STRICTLY IN ACCORDANCE TO WITH MANUFACTURES INSTRUCTIONS.

2. PREPARATION

REMOVE SURFACE CONTAMINATION WITH PLASCON AQUASOLV DEGREASER (GR1). RINSE THOROUGHLY WITH FRESH WATER AND ALLOW TO DRY. MECHANICALLY OR HAND PREPARE BY WIRE BRUSHING ALL DAMAGED AND/OR CORRODED AREAS TO ST 2 OF INTERNATIONAL STANDARD ISO 8501-1:1988. ENSURE THAT SURFACE ARE CLEAN, DRY, AND FREE OF DIRT, DUST OR ANY OTHER CONTAMINATION.

3. APPLICATION

- SHOP PAINTING
APPLY ONE COAT ON ALKYD ZINC PHOSPHATE PRIMER BY AIRLESS SPRAY AT A RATE OF 6m²/l TO ACHIEVE A DRY FILM THICKNESS OF 125-175 µm.

- PAINTING AFTER ERECTION
APPLY TWO COASTS OFPLASCON SUPER UNIVERSAL ENAMEL 6 m²/l TO ACHIEVE OBLITERATION.

NOTES: STRUCTURAL STEELWORK

1. THE APPLICABLE STANDARD SPECIFICATION IS SANS 1200H - 1983, WHICH SHOULD BE READ IN CONJUNCTION WITH THE VARIATIONS AND ADDITIONS CONTAINED IN THE *THEMBA PROJECT SPECIFICATION FOR STEELWORK.*
2. UNLESS OTHERWISE NOTED ALL STRUCTURAL STEELWORK TO BE: GRADE 350W
3. UNLESS OTHERWISE NOTED ALL WELDS TO BE: 6mm FILLET WELDS.
4. UNLESS OTHERWISE NOTED ALL BOLTS TO BE: GRADE 8.8
5. PAINTING IS TO BE IN STRICT ACCORDANCE WITH THE PROJECT SPECIFICATION. THE PAINT SYSTEM SHALL BE AS SUPPLIED BY ONE APPROVED MANUFACTURER AND SHALL BE APPLIED IN ACCORDANCE WITH HIS RECOMMENDATIONS
6. THE CONTRACTOR IS TO SUBMIT TWO PRINTS OF ALL SHOP DRAWINGS TO THE ENGINEER FOR COMMENT PRIOR TO COMMENCEMENT OF FABRICATION.
7. THE CONTRACTOR IS TO ENSURE THAT ALL CONNECTIONS EXCEED THE LOAD CAPACITY OF THE MEMBERS CONNECTED.
8. **ALL DIMENSIONS RELATING TO "AS-BUILT" CONSTRUCTION ARE APPROXIMATE. ALL SUCH DIMENSIONS AND LEVELS ARE TO BE VERIFIED ON SITE BY CONTACTOR PRIOR TO COMMENCING FABRICATION DRAWINGS.**

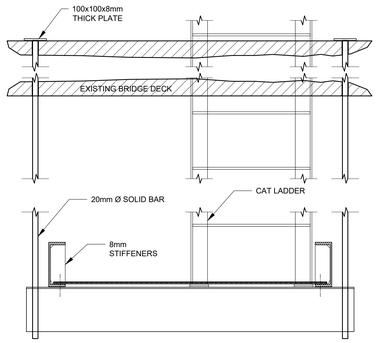

SECTION A
SCALE 1: 10

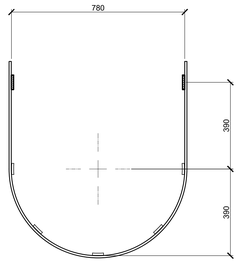

SECTION F
SCALE 1: 10

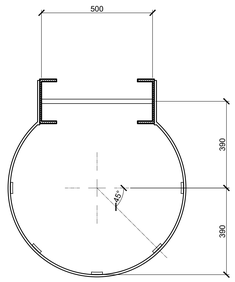

SECTION G
SCALE 1: 10

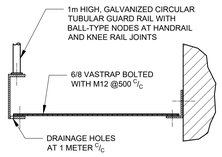

SECTION B
SCALE 1: 10

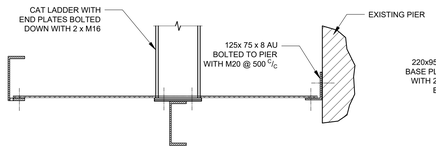

SECTION C
SCALE 1: 10

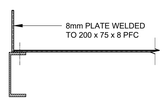

SECTION D
SCALE 1: 10

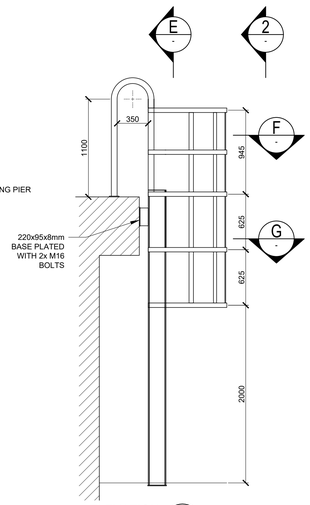

ELEVATION 1
SCALE 1:25

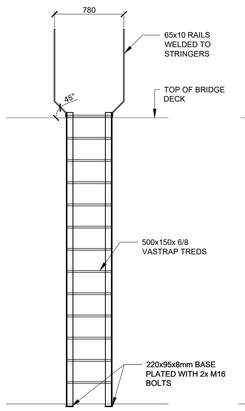

SECTION E
SCALE 1:25

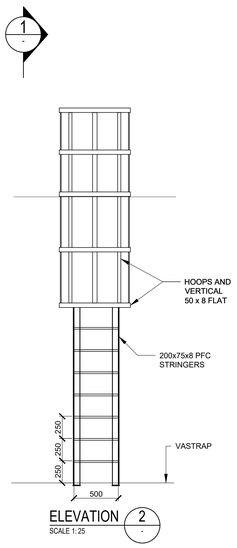

ELEVATION 2
SCALE 1:25

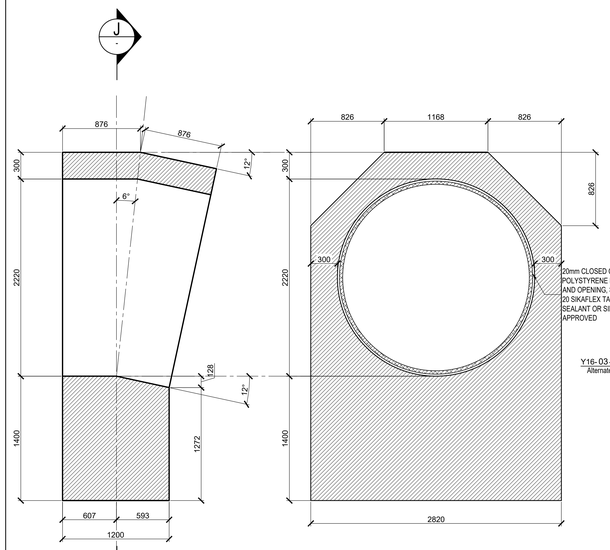

CONCRETE ANCHOR BLOCK
SCALE 1:25

SECTION J
SCALE 1:25

CONCRETE ANCHOR BLOCK

CONCRETE
STRENGTH: 25 MPA
COVER: 60mm

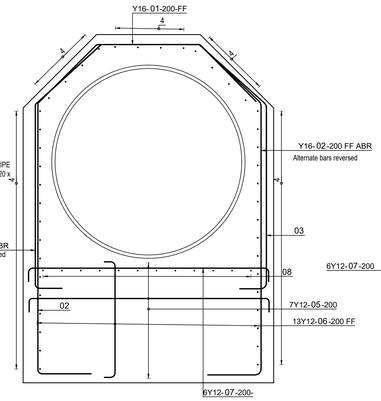

SECTION J
SCALE 1:25

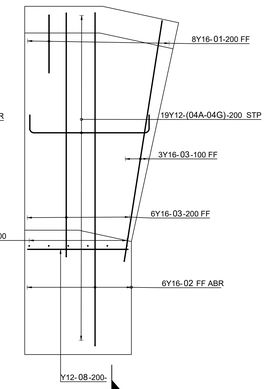

ELEVATION 1
SCALE 1:25

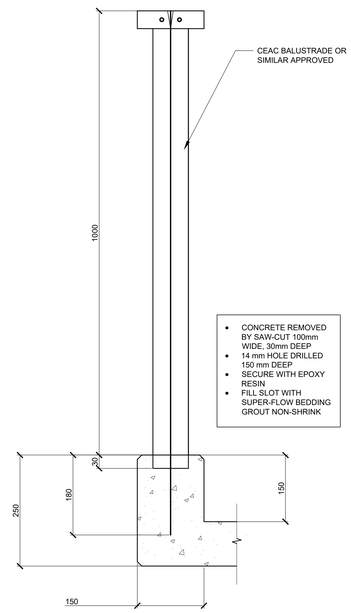

BALUSTRADE FIXING METHODOLOGY DETAIL
SCALE 1:5

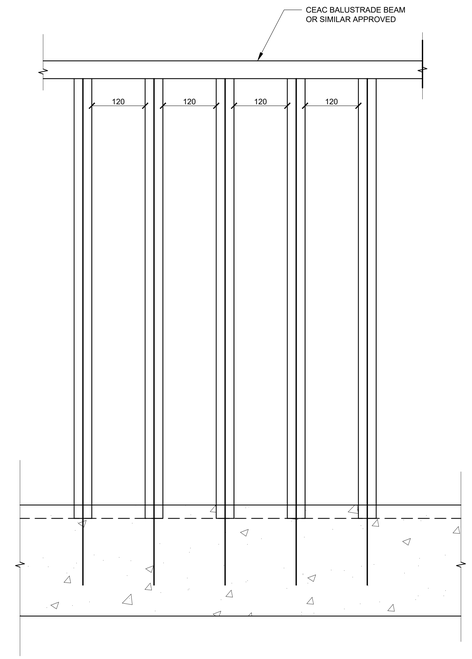

BALUSTRADE ELEVATION DETAIL
SCALE 1:5

NOT FOR CONSTRUCTION

CONSULTANTS DWG NO
13247-02/S/018/A

themba Confidence Trust
INFRASTRUCTURE CONSULTING
Tel: 0861themba (843633)
email: info@themba-africa.com

DESIGNED	KB	29/08/2024
DRAWN	LD, WM	29/08/2024
CHECKED	WM, LD	29/08/2024
APPROVED BY:	SIGNATURE	DATE
ECSA REG. No.	.	
CHECKED BY:		
	SIGNATURE	DATE

CLIENT
JOHANNESBURG WATER
TURBINE HACC
62 NTEMI PICISO STREET
NEW TOWN

Johannesburg Water

TURBINE HACC
62 NTEMI PICISO STREET
NEWTOWN

TEL: (011) 688-1400
FAX: (011) 688-1521

Joburg

DIEPSLOOT SEWAGE AQUEDUCT
BRIDGE 2

PLATFORM, CAT LADDER, BALUSTRADE AND CONCRETE ANCHOR DETAILS

SURVEY INFORMATION		APPROVAL BY JW DEPOT			SCALE	REV:	AMENDMENTS	DATE:
PROJECT SURVEYOR:		CHECKED			AS SHOWN	A	ISSUED FOR TENDER	30/09/2024
		APPROVED BY:						
DATE:			SIGNATURE	DATE				
CCTV INFORMATION		APPROVAL BY JW PLANNING						
CCTV COMPANY:		CHECKED						
		APPROVED BY:						
DATE:			SIGNATURE	DATE				

DRAWING No.

PROJECT No.	DRAWING No.	REV.
JW14455	-	A

ORIGINAL PAGE SIZE: A0 SHEET 1 OF 1

FILE No.